Parts list

A 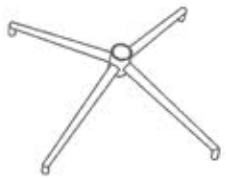	B	C
Base : 1pc	Gas lift : 1pc	Caster : 4pcs
D	E 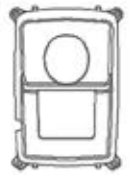	F 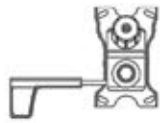
Seat cushion : 1pc	Seat base : 1pc	Mechanism : 1pc
G	H	I
Headrest : 1pc	Headrest fix : 1pc	Headrest cover : 1pc
J	K	L
Hex wrench : 1pc(M4)	Hex wrench : 1pc(M6)	M6 Screw : 4pcs (5/16"*28.5mm)
M		
M4 Screw(short) : 2pcs (1/4"*19mm)		

Safety Instructions

Please read the Safety Instructions below carefully

1 . Do not overload this chair. Each chair can only bear one person's weight at maximum.
2 . Please use it on a flat surface.
3 . Children under 5 years old should NOT use the chair.
4 . Please do not sit on the chair arm.
5 . Please do not stand on a chair or use it as a ladder/ trolley.
6 . Please do not use sharp things to scrape it or place it close to fire.
7 . Please do not put your fingers in between the chair while using it.

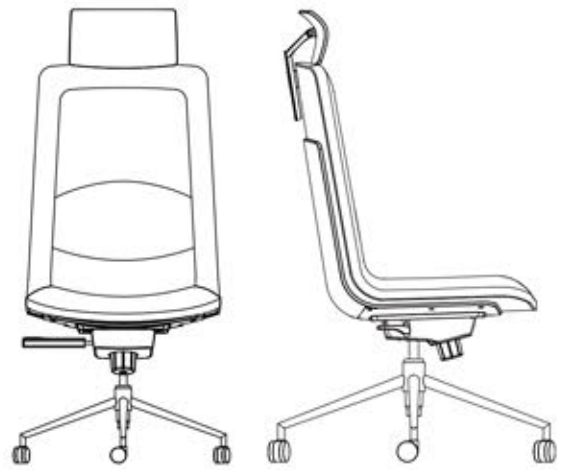

Solos Fashion Ergonomic Chair(No Handle)

SOLOS

SO-EC002NH-GY

www.solso-it.eu
europe@solos-it.com

Instruction Manual

①

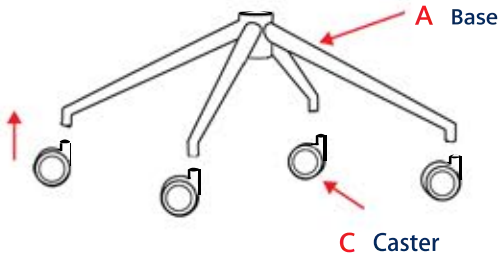

Step 1 : Put the casters into the holes at the end of each base leg.

②

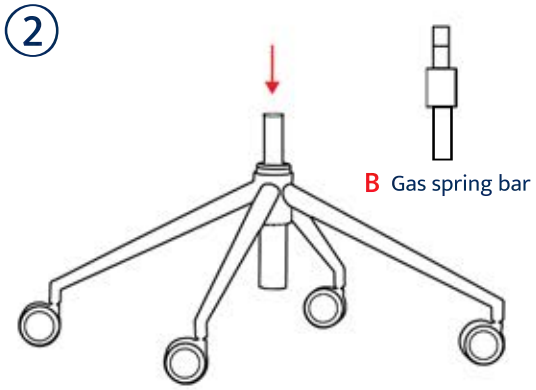

Step 2 : Insert the gas lift into the center hole of the star base

③

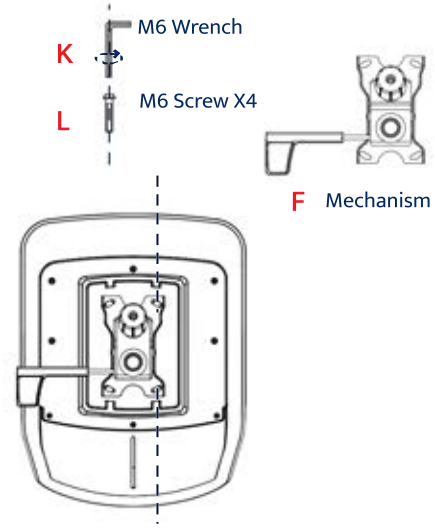

Step 3 : Insert 4 screws into the mechanism to make sure it is firm

④

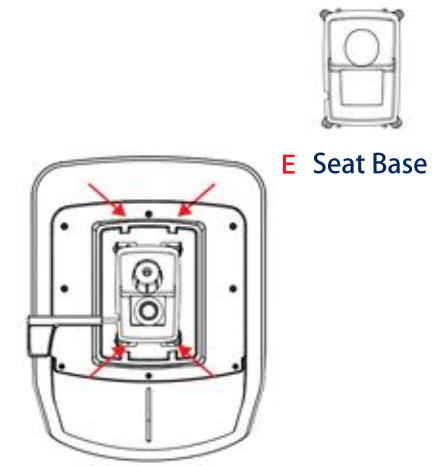

Step 4 : Put the cover on the seat plate to cover the mechanism

⑤

Step 6 : Attach the whole seat to the star base

⑥

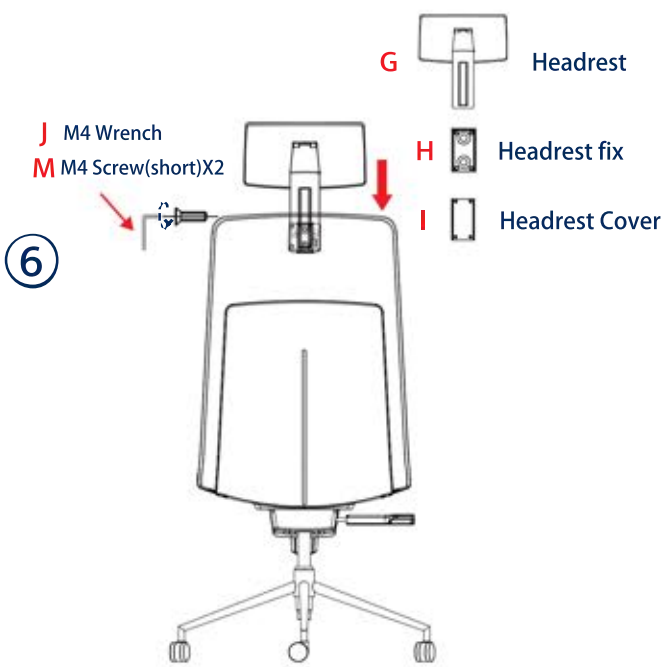

Step 7 : Attach headrest with the cover to the back cushion

⑦

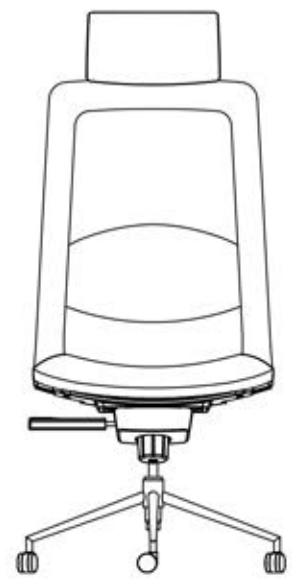

Finished product