SOLOS

www.solos-it.com
sales@solos-it.com

SOLOS Mobile AV Cart

SO-AVC01-BK

Assembly Manual

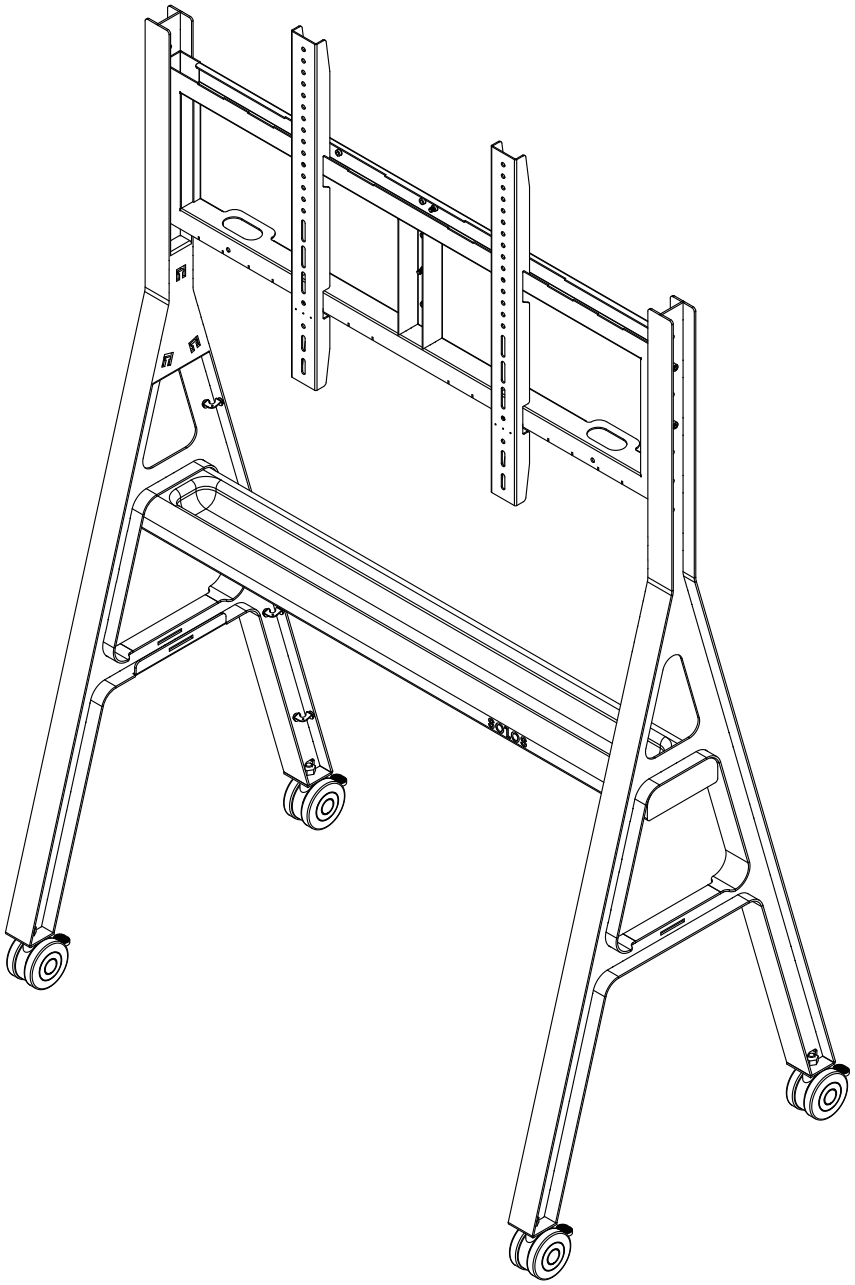

Inside Box

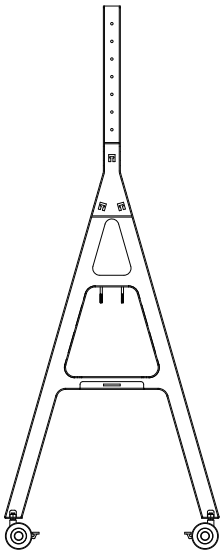

Height adjustable
A-shaped stand
X2

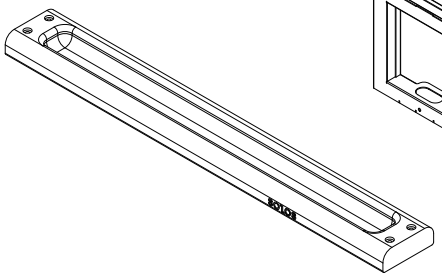

Storage wood tray
(with spray paint finish)
X1

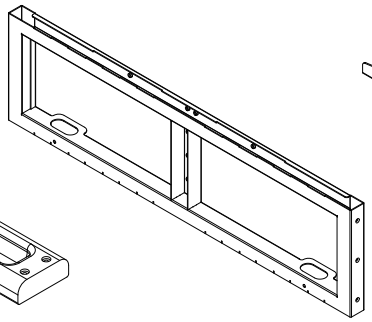

Screen mounting frame
X1

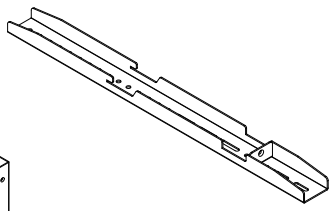

Screen Hook
X2

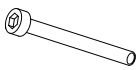

X2
Inner hexagon Screw
M6x60mm

X10
Inner hexagon Screw Set
M6x14mm

X4
Locknut

X4
Scew Pad

X1
Outer Hex screwdriver

X1
Allen screwdriver

X8
Magnet Strap

Step1

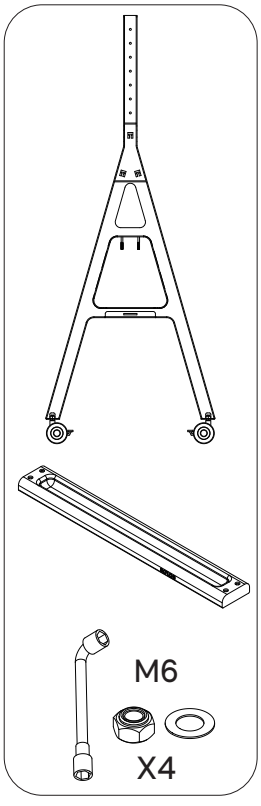

Tools Used

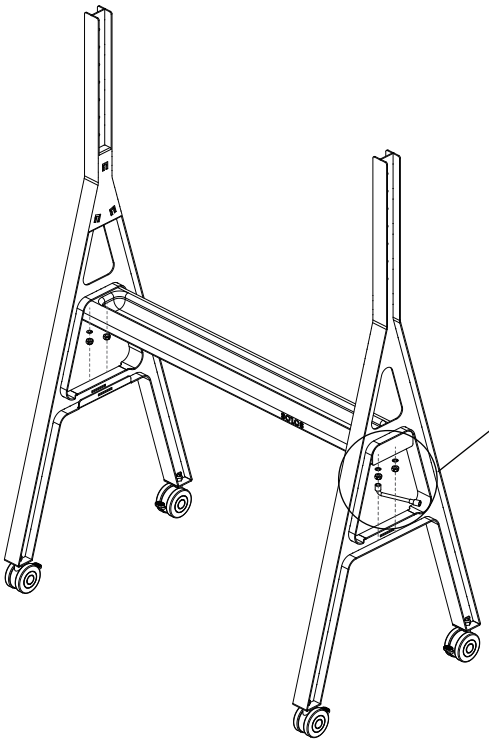

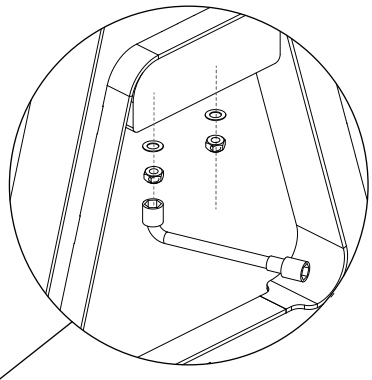

Use four M6 lock nuts and gaskets to fix the Storage wood tray with 2 A-shaped stands

Step2

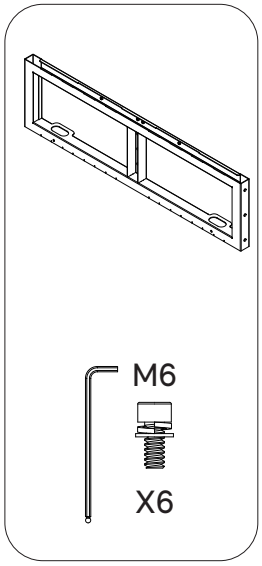

A

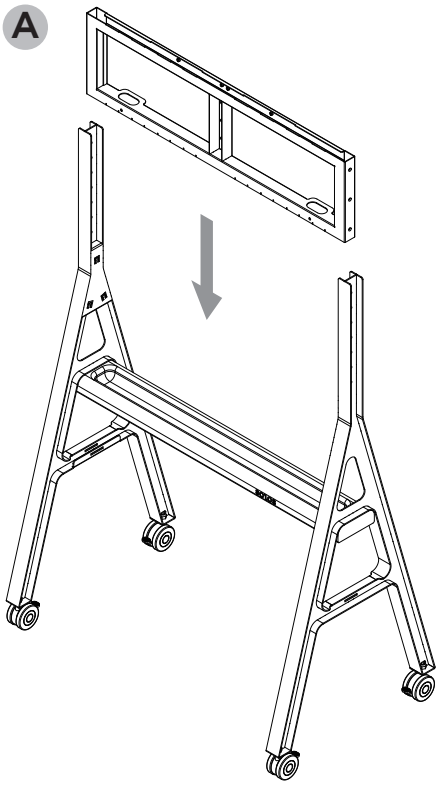

Insert the display mounting frame between two A-shaped Stand then fix it with six M6 screws on the sides

B

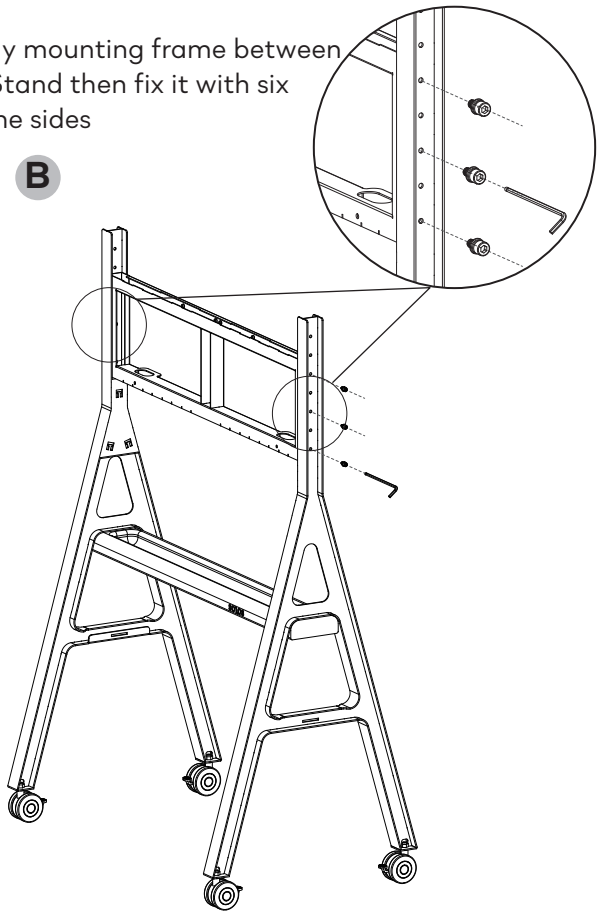

Step3

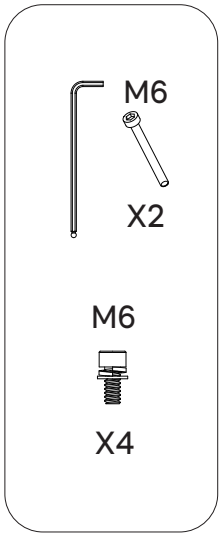

Tools Used

A

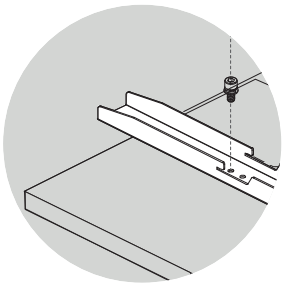

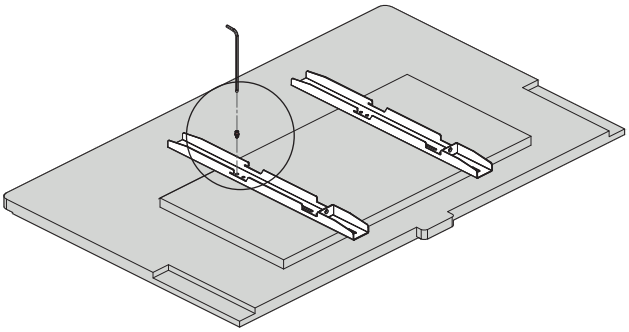

Fix the Screen Hook on the back of the display with M6 screws

B

Carefully hang the display on the SOLOS AV Cart;fasten the screws from the bottom to secure it.

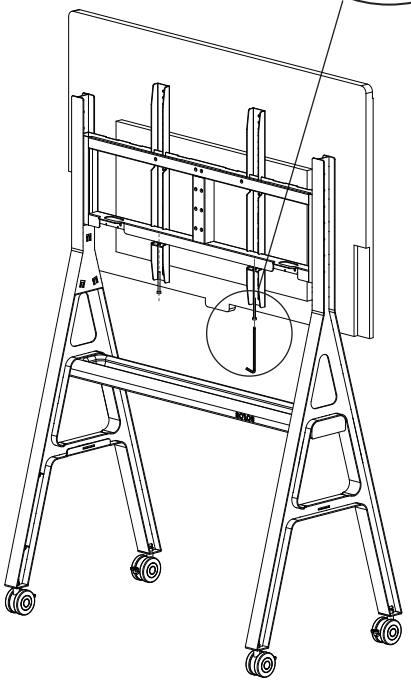

Step4

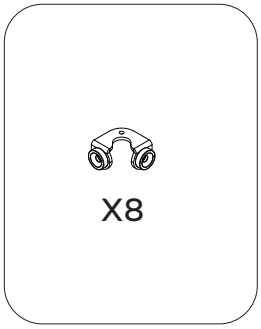

Tools Used

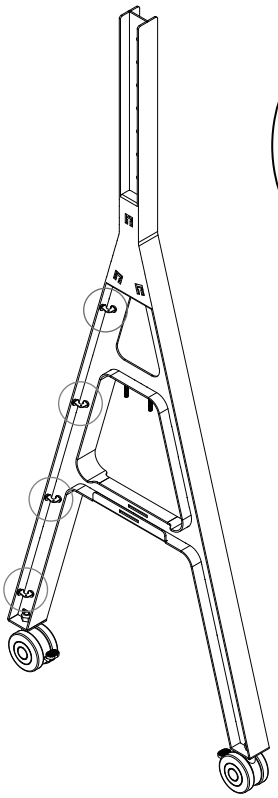

Attach the Magnet Strap to the inner side of A-shaped Stands for cable management

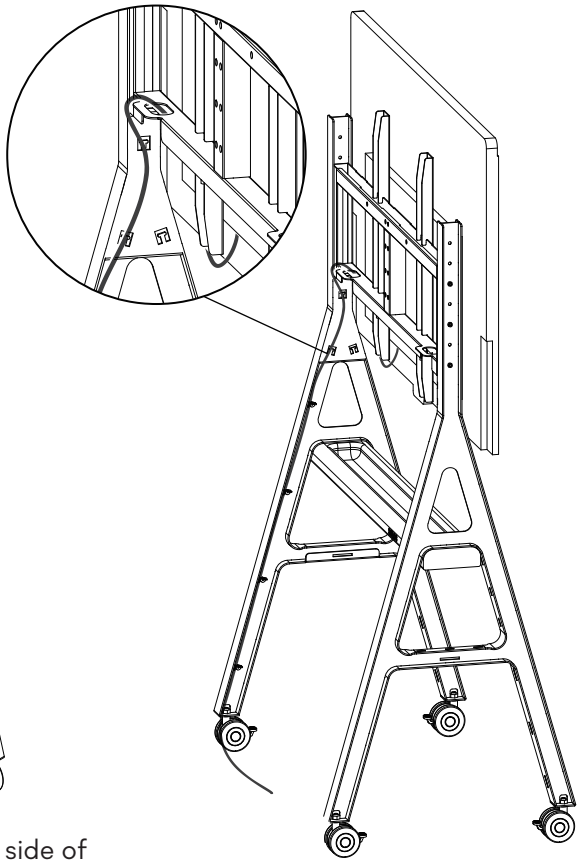

Cable Management
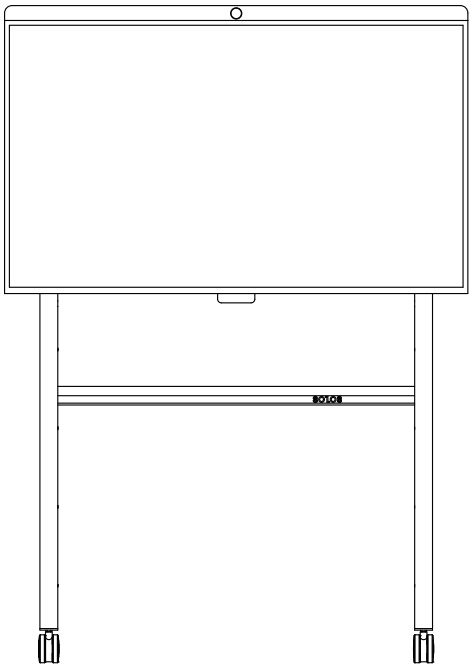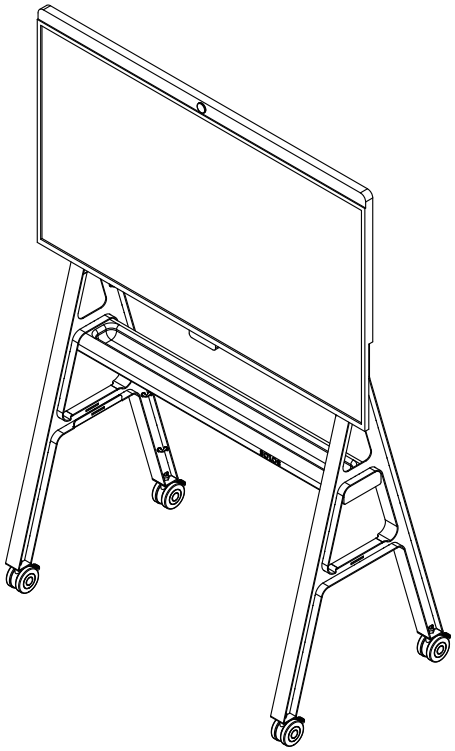
Standard Version Finished